Rel. 20170518

## Professional Handheld Indicator LR-*Cal* LHM for pressure, force/weight and torque

- With internal pressure or force sensor or without internal sensor.
- External sensors for pressure and torque.
- Rigid aluminium housing, portable.
- Up to 4800 measurements per second, programmable.
- Data logger (130,000 measured values).
- USB interface.
- PEAK function, positive and negative.
- „First PEAK“ detection, programmable.
- Programmable filter and average function.
- Chargeable Li-Ion battery, incl. USB charger.
- 15 pressure units, 9 force/weight units, 8 torque units.
- Up to 7 external sensors, also mixed, automatic sensor recognition.
- Possibility of linearisation and calibration of the sensor(s).
- Optional WIRELESS data transmission.

Wireless (optional)

The multipurpose high accurate handheld indictator **LR-*Cal* LHM** is not only suitable for very precise measurement of pressure, force and torque in the field, but also specially as reference instrument for calibration, verification and adjustment of pressure, force or torque reading instruments. The analog-digital converter‘s resolution of 50,0000 digits works with all **LR-*Cal*** reference sensors with 2mV/V signal. Via menu it is possible to set zero-point and span as well as linearisation with 5 points.

The measurement rate of up to 4,800 measurements per second make this handheld instrument ideal for detection of max. or min. values (PEAKs).

**LR-*Cal* LHM**
Very precise and accurate measurement of pressure, force and torque.

**LR-*Cal* LHM** with internal pressure sensor, from 100 mbar, accuracy up to 0.05% FS in transit case, with pressure test pump **LR-*Cal* LPP 08** as kit for calibration, verification and adjustments, for small pressure values, with very high accuracy.

## Specification:

| | |
|---|---|
| Supply | Built-in chargeable Li-Ion battery, 3.7 V, 750 mAh, Type 14500 |
| Operating time with fully charged battery: | approx. 24 h (if backlight is switched off and no data logging |
| Graphic display: | LCD 128 x 64 dots with 3 level of back lightning 180° rotatable on key press |
| Selectable pressure units: | bar, mbar, psi, Mpa, kPa, Pa, mH2O, inH2O, kg/cm², mmHg, cmHg, inHg, atm, mHg, mmH2O |
| Selectable force/weight units: | kg, g, t, N, daN, kN, MN, lb, klb |
| Selectable torque units: | Nm, Nmm, kgm, kNm, in/lbf, ft/lbf, gcm, kgmm |
| Selectable displacement units: | mm, inch |
| Internal resolution: | 24 bit |
| Readings per second (programmable): | 5, 10, 20, 50, 100, 300, 600, 1200, 2400 oder 4800 |
| Max. transmission rate (USB): | 50 ms (in continuous mode) |
| Digital filter (moving average): | 1, 2, 4, 8, 16 or 32 points |
| Programmable resolution: | 1, 2, 5, 10, 20, 50 or 100 |
| ZERO function: | 100% FS |
| PEAK function: | Positive and Negative |
| Data logger: | 130,000 values, programmable (1 s to 24 h) oder key press |
| Reference temperature: | +23°C |
| Working temperature: | +10...+50°C |
| Storage temperature: | -10...+60°C |
| Protection degree: | IP 40 |
| Case material: | Aluminium |
| Dimensions: | 176 x 79 x 32 mm |
| Max. number of external sensors: | Up to 7 sensors, automatic recognition |
| Interface: | USB 2.0, or WIRELESS with option "**LHM-WF**" |

| Optional internal pressure sensor | gauge, absolute or differential pressure, opt. with vacuum |
|---|---|
| Gauge and differential pressure ranges: | 100 mbar, 500 mbar, 1 bar, 2,5 bar or 5 bar |
| Absolute pressure ranges: | 500 mbar, 1 bar, 2,5 bar oder 5 bar |
| Accuracy: | ≤±0.10% or optional ≤0.05% with option "**LHM-KL005**" |
| Temperature influence (at zero and at FS): | each ≤±0.01% |
| Pressure port: (at differential pressure: 2 ports) | M8 female, suitable for quick fit hose connector "**LPP-08-PN-STECK**" (for hose 4 x 2 mm, not in standard supply) |

Resolution (internal pressure sensors):

| bar | | mbar | | psi | | MPa | | kPa | | Pa | | mH2O | |
|---|---|---|---|---|---|---|---|---|---|---|---|---|---|
| FS | Res. | FS | Res. | FS | Res. | FS | Res. | FS | Res. | FS | Res. | FS | Res. |
| 0.1000 | 0.0001 | 100.00 | 0.01 | 1.4500 | 0.0001 | 0.0100 | 0.0001 | 10.000 | 0.001 | 10000 | 1 | 1.0000 | 0.0001 |
| 0.5000 | 0.0001 | 500.00 | 0.10 | 7.2000 | 0.0010 | 0.0500 | 0.0001 | 50.000 | 0.005 | 50000 | 5 | 5.0000 | 0.0005 |
| 1.0000 | 0.0001 | 1000.0 | 0.1 | 14.500 | 0.0001 | 0.1000 | 0.0001 | 100.00 | 0.01 | 100000 | 10 | 10.000 | 0.001 |
| 2.5000 | 0.0005 | 2500.0 | 0.5 | 36.200 | 0.005 | 0.2500 | 0.0001 | 250.00 | 0.05 | 250000 | 50 | 25.500 | 0.005 |
| 5.0000 | 0.0005 | 5000.0 | 0.5 | 72.500 | 0.005 | 0.5000 | 0.0001 | 500.00 | 0.05 | 500000 | 50 | 51.000 | 0.05 |

| inH2O | | Kg/cm2 | | mmHg | | cmHg | | inHg | | Atm | |
|---|---|---|---|---|---|---|---|---|---|---|---|
| FS | Res. | FS | Res. | FS | Res. | FS | Res. | FS | Res. | FS | Res. |
| 40.000 | 0.005 | 0.1000 | 0.0001 | 75.00 | 0.01 | 7.500 | 0.001 | 3.0000 | 0.0002 | 0.1000 | 0.0001 |
| 200.00 | 0.02 | 0.5000 | 0.0001 | 375.00 | 0.05 | 37.500 | 0.005 | 14.500 | 0.002 | 0.5000 | 0.0001 |
| 400.00 | 0.05 | 1.0000 | 0.0001 | 750.0 | 0.1 | 75.00 | 0.01 | 30.000 | 0.002 | 1.0000 | 0.0001 |
| 1000.00 | 0.10 | 2.5500 | 0.0005 | 1900.0 | 0.2 | 190.00 | 0.02 | 75.00 | 0.01 | 2.5000 | 0.0002 |
| 2000.0 | 0.2 | 5.0000 | 0.0005 | 3750.0 | 0.5 | 375.00 | 0.05 | 145.00 | 0.02 | 5.0000 | 0.0005 |

Instruments with internal pressure sensors are fitted with 1 or 2 (differential pressure versions) pressure ports at the top of the instrument: M8 female. For pressure hose connection we recommend our part number **LPP-08-PN-STECK**: Push&Pull quick fit hose connector for pneumatic hoses 4 x 2 mm.

| Optional internal force sensor (measurement of compression and tension) | |
|---|---|
| Force ranges: | 10N, 25N, 50N, 100N, 250N, 500N, 1kN, 3kN or 5 kN |
| Accuracy: | ≤±0.05% |
| Temperature influence (at zero and at FS): | each ≤±0.01% |
| Process connection: | M6 male thread (Tool-kit „LHM-N-KIT“ recommended) |

Resolution (internal pressure sensors):

| N | | daN | | kN | | kg | | g | | lb | |
|---|---|---|---|---|---|---|---|---|---|---|---|
| FS | Aufl./Res. | FS | Aufl./Res. | FS | Aufl./Res. | FS | Aufl./Res. | FS | Aufl./Res. | FS | Aufl./Res. |
| 10.000 | 0.005 | 1.0000 | 0.0005 | 0.0100 | 0.0005 | 1.0000 | 0.0005 | 1000.0 | 0.5 | 2.2000 | 0.001 |
| 25.000 | 0.005 | 2.5000 | 0.0005 | 0.0250 | 0.0005 | 2.5000 | 0.0005 | 2500.0 | 0.5 | 5.5000 | 0.001 |
| 50.000 | 0.005 | 5.0000 | 0.0005 | 0.0500 | 0.0005 | 5.0000 | 0.0005 | 5000.0 | 0.5 | 11.000 | 0.001 |
| 100.00 | 0.05 | 10.000 | 0.005 | 0.1000 | 0.005 | 10.000 | 0.005 | 10000 | 5 | 22.000 | 0.01 |
| 250.00 | 0.05 | 25.000 | 0.005 | 0.2500 | 0.005 | 25.000 | 0.005 | 25000 | 5 | 55.000 | 0.01 |
| 500.00 | 0.05 | 50.000 | 0.005 | 0.5000 | 0.005 | 50.000 | 0.005 | 50000 | 5 | 110.00 | 0.01 |
| 1000.0 | 0.5 | 100.00 | 0.05 | 1.0000 | 0.0005 | 100.00 | 0.05 | / | / | 220.00 | 0.1 |
| 3000.0 | 0.5 | 300.00 | 0.05 | 3.0000 | 0.0005 | 300.00 | 0.05 | / | / | 660.00 | 0.1 |
| 5000.0 | 0.5 | 500.00 | 0.05 | 5.0000 | 0.0005 | 500.00 | 0.05 | / | / | 1100.0 | 0.1 |

| Input for external sensors | |
|---|---|
| Input signal: | ±2 mV/V |
| Internal resolution: | ±50,000 |
| Accuracy: | ≤ 0.01% |
| Supply: | 5 VDC ±4% |
| Electrical connection: | 4-wire |
| Temperature influence (at zero and at FS): | each ≤±0.01% |

| Optional external pressure sensor TP16 | |
|---|---|
| Pressure ranges: | 10 bar, 20 bar, 50 bar, 100 bar, 250 bar, 350 bar, 500 bar, 700 bar, 1000 bar, 1500 bar, 2000 bar |
| Accuracy: | ±0.1% or optional ±0.05% with option "LHM-P-KL005" |
| Working range: | up to 100% FS (at dynamical pressures up to 75% FS) |
| Overpressure: | 150% FS |
| Burst pressure: | >300% FS |
| Measurement frequency: | from 20 to 100 kHz |
| Temperature influence (at zero and at FS): | each ≤±0,015% |
| Pressure port: | 1/2" BSP male |
| Recommended gasket up to 700 bar: | USIT-ring A 63-18 |
| Recommended sealing ≥1000 bar: | Double sealing cone 60°, Code TLDMM-DK (not in standard delivery) |
| Material: | Stainless steel |
| Connection to LR-Cal LHM: | approx. 4 m connection cable, automatic recognition |

| Optional external torque sensor TRS (measurement clockwise and counter-clockwise): | |
|---|---|
| Torque ranges: | 0,5 Nm, 2,5 Nm, 5 Nm, 10 Nm, 25 Nm, 50 Nm, 100 Nm, 250 NM, 500 Nm or 1000 Nm |
| Accuracy: | ±0.2% or optional ±0.1% with option "LHM-TRS-KL01" |
| Working range: | up to 100% FS (at dynamic torques up to 70% FS) |
| Max. load: | 150% FS |
| Burst load: | >300% FS |
| Reference temperature: | +23°C |
| Working temperature: | -10...+70°C |
| Storage temperature: | -20...+80°C |
| Connection port: | 0,5 - 2,5 - 5 - 10 Nm: □ 1/4"<br>25 - 50 Nm: □ 3/8"<br>100 - 250 Nm: □ 1/2"<br>500 - 1000 Nm: □ 3/4" |
| Material: | Stainless steel |
| Connection to LR-Cal LHM: | approx. 4 m connection cable, automatic recognition |

**Dimensions [mm]** (the images on the left hand side are showing the version with WIRELESS option)

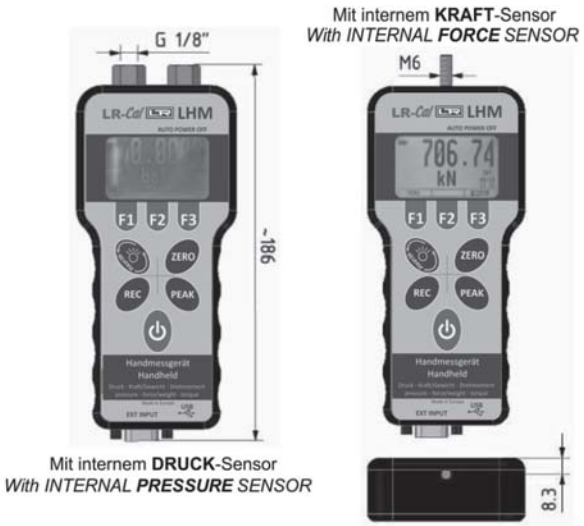


**Dimensions [mm] External pressure sensor LHM-TP16:**

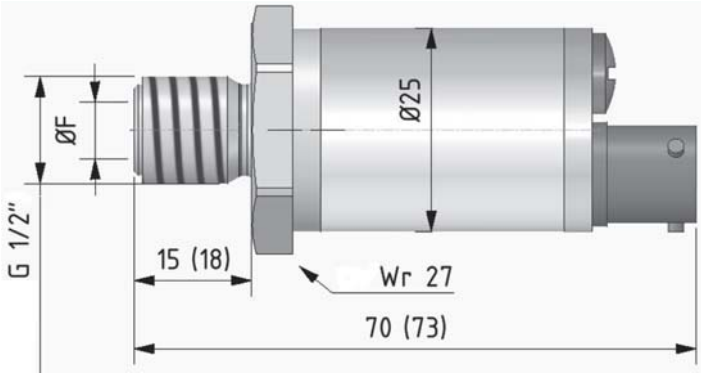


Installation / Sealing LHM-TP16:

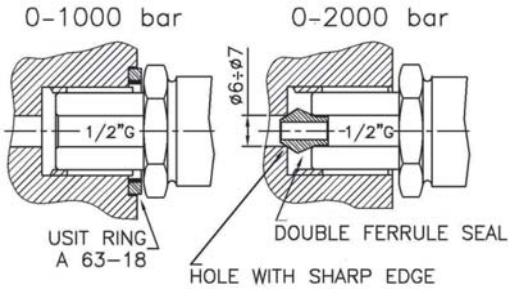


**Dimensions [mm] Externer torque sensor LHM-TRS:**

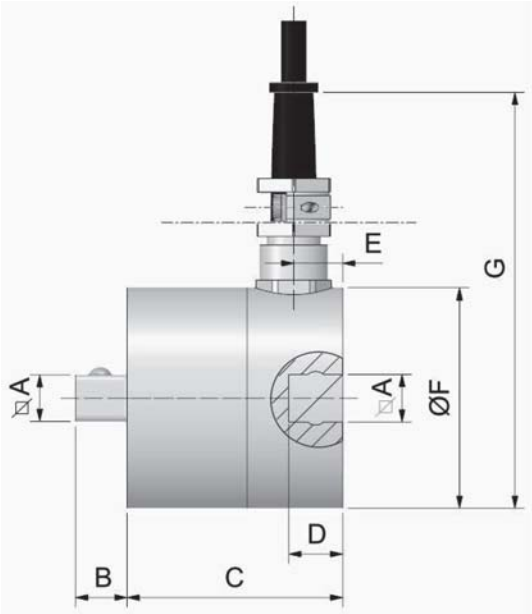


| Artikel-Nr. Order-Code | Bereich Load | □ A | B | C | D | E | F | G |
|---|---|---|---|---|---|---|---|---|
| LHM-TRS-8005 | 0,5 Nm | 1/4" | 7,5 | 44 | 8 | 10 | 45 | 85 |
| LHM-TRS-0002 | 2,5 Nm | 1/4" | 7,5 | 44 | 8 | 10 | 45 | 85 |
| LHM-TRS-0005 | 5 Nm | 1/4" | 7,5 | 44 | 8 | 10 | 45 | 85 |
| LHM-TRS-0010 | 10 Nm | 1/4" | 7,5 | 44 | 8 | 10 | 45 | 85 |
| LHM-TRS-0025 | 25 Nm | 3/8" | 10,5 | 44 | 11 | 10 | 45 | 85 |
| LHM-TRS-0050 | 50 Nm | 3/8" | 10,5 | 44 | 11 | 10 | 45 | 85 |
| LHM-TRS-0100 | 100 Nm | 1/2" | 15,0 | 44 | 16 | 10 | 45 | 85 |
| LHM-TRS-0250 | 250 Nm | 1/2" | 15,0 | 44 | 16 | 10 | 45 | 85 |
| LHM-TRS-0500 | 500 Nm | 3/4" | 22,5 | 53,5 | 24 | 17,5 | 51 | 91 |
| LHM-TRS-1000 | 1000 Nm | 3/4" | 22,5 | 53,5 | 24 | 17,5 | 51 | 91 |

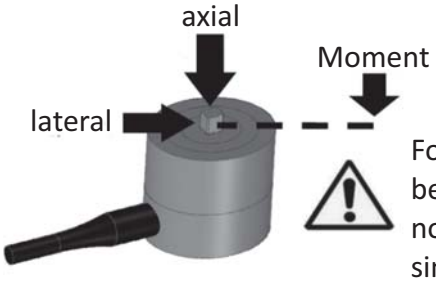


For correct measurement both axial and transverse forces and bending moment should be absent. In case of presence, they must not be greater than the values below, to be reduced in simultaneous presence of more solicitations:

| Artikel-Nr. Order-Code | Bereich Range | Max. axiale Belastung Max. axial permissible load | Max. seitliche Belastung Max. lateral permissible load | Max. Abwinklung Bending limit moment |
|---|---|---|---|---|
| LHM-TRS-8005 | 0,5 | 0,38 kN | 15 N | 1 Nm |
| LHM-TRS-0002 | 2,5 | 0,38 kN | 15 N | 1 Nm |
| LHM-TRS-0005 | 5 | 0,5 kN | 15 N | 1,5 Nm |
| LHM-TRS-0010 | 10 | 0,9 kN | 30 N | 3,5 Nm |
| LHM-TRS-0025 | 25 | 2,2 kN | 30 N | 4,5 Nm |
| LHM-TRS-0050 | 50 | 3,5 kN | 80 N | 15 Nm |
| LHM-TRS-0100 | 100 | 6 kN | 150 N | 20 Nm |
| LHM-TRS-0250 | 250 | 9,5 kN | 180 N | 42 Nm |
| LHM-TRS-0500 | 500 | 18 kN | 250 N | 65 Nm |
| LHM-TRS-1000 | 1000 | 28 kN | 400 N | 170 Nm |

## Overview Order-Codes for measurement of pressure and force:

**LR-*Cal* LHM with internal pressure sensor:**

| | | | |
|---|---|---|---|
| LHM-0100-GP | 0...100 mbar gauge | | |
| LHM-0500-GP | 0...500 mbar gauge | LHM-0500-AP | 0...500 mbar absolute |
| LHM-1000-GP | 0...1 bar gauge | LHM-1000-AP | 0...1 bar absolute |
| LHM-2500-GP | 0...2,5 bar gauge | LHM-2500-AP | 0...2,5 bar absolute |
| LHM-5000-GP | 0...5 bar gauge | LHM-5000-AP | 0...5 bar absolute |
| LHM-0100-VA | -100...+100 mbar | LHM-0100-DP | 0...100 mbar differential press. |
| LHM-0500-VA | -500...+500 mbar | LHM-0500-DP | 0...500 mbar differential press. |
| LHM-1000-VA | -1...+1 bar | LHM-1000-DP | 0...1 bar differential press. |
| LHM-2500-VA | -1...+2,5 bar | LHM-2500-DP | 0...2,5 bar differential press. |
| LHM-5000-VA | -1...+5 bar | LHM-5000-DP | 0...5 bar differential press. |

**External pressure sensors LHM-TP16:**

| | |
|---|---|
| LHM-P-0010 | 0...10 bar |
| LHM-P-0020 | 0...20 bar |
| LHM-P-0050 | 0...50 bar |
| LHM-P-0100 | 0...100 bar |
| LHM-P-0250 | 0...250 bar |
| LHM-P-0350 | 0...350 bar |
| LHM-P-0700 | 0...700 bar |
| LHM-P-1000 | 0...1000 bar |
| LHM-P-1500 | 0...1500 bar |
| LHM-P-2000 | 0...2000 bar |

**LR-*Cal* LHM with internal force sensor:**

| | |
|---|---|
| LHM-0010-N | 0...10 N |
| LHM-0025-N | 0...25 N |
| LHM-0050-N | 0...50 N |
| LHM-0100-N | 0...100 N |
| LHM-0250-N | 0...250 N |
| LHM-0500-N | 0...500 N |
| LHM-1000-N | 0...1000 N |
| LHM-3000-N | 0...3000 N |
| LHM-5000-N | 0...5000 N |

Accuracy of pressure measurement: ±0.1% FS, optional ±0.05% FS.

Accuracy of force measurement: ±0.05%.

## Included in scope of delivery:

- Handheld **LR-*Cal* LHM** without internal sensor, or
  Handheld **LR-*Cal* LHM** with internal gauge pressure, absolute pressure or differential pressure sensor, or
  Handheld **LR-*Cal* LHM** with internal force sensor
- Built-in chargeable Li-Ion battery 3.7 V (size 14500)
- USB charger 110...230 VAC, 5 V, 750 mA
- USB 2.0 cable
- Certificate(s) of calibration, as follows:

| | |
|---|---|
| - **LR-*Cal* LHM without** internal sensor: | none |
| - **LR-*Cal* LHM** with **internal pressure sensor**: | Factory certificate of calibration |
| - **LR-*Cal* LHM** with **internal force sensor**: | ACCREDIA (DAkkS) certificate for tension |
| - **External pressure sensors LHM-TP16**: | Factory certificate of calibration |
| - **Externe torque sensors LHM-TRS**: | ACCREDIA (DAkkS) certificate for clockwise direction |

- Transit case with suitable foams
- Operating manual (German/English)

with WIRELESS antenna

## Options for all instrument versions:

| | |
|---|---|
| • **LHM-WF** | WIRELESS option |
| • **LHM-GK** | Rubber cup, yellow |
| • **LHM-Cal** | Windows-Software (english) for PC/Laptop |
| • **PC-WIRELESS** | WIRELESS Receiver 433 Mhz. for PC/Laptop with USB port |

## Options for instruments with internal pressure sensor:

| | |
|---|---|
| • **LHM-KL005** | Accuracy ±0.05% FS (standard: 0.1% FS) |
| • **LHM-AZERT** | ACCREDIA (DAkkS) certificate (standard: factory certificate) |
| • **LPP-08-PN-STECK** | Push&Pull quick fit hose connectors for pneumatic hose 4 x 2 mm (for version with differential pressure sensor you need 2 pcs.) |

## Options for instruments with internal force sensor:

| | |
|---|---|
| • **LHM-N-A-D** | ACCREDIA (DAkkS) certificate for compression |
| • **LHM-N-KIT** | Tool-Kit with parts for mesuring compression and tension |

## Options for external pressure sensor LHM-TP16:

| | |
|---|---|
| • **LHM-P-KL005** | Accuracy ±0.05% FS (standard: 0.1% FS) |
| • **LHM-P-AZERT** | ACCREDIA (DAkkS) certificate (standard: factory certificate) |
| • **TLDMM-DK** | Doubel sealing cone 60° for pressure port ranges 1500 and 2000 bar |

## Options for external torque sensor LHM-TRS:

| | |
|---|---|
| • **LHM-TRS-KL01** | Accuracy ±0.1% FS (standard: 0.2% FS) |
| • **LHM-TRS-AZERT-0500** | ACCREDIA (DAkkS) certificate, counter-clockwise direction, ranges up to 500 Nm |
| • **LHM-TRS-AZERT-1000** | ACCREDIA (DAkkS) certificate, counter-clockwise direction, ranges 1000 Nm and above |

Im Lieferumfang enthaltener Koffer

Artikel-Nr. **LHM-N-KIT**

Artikel-Nr. **PC-WIRELESS**

## Digital Portable Manometer LR-*Cal* Serie 2000

**Types 202xP: without leak test and data logging functionality**
Types 208x**P: with leak test and data logging functionality**

- easy operation
- great performance
- measurement of pressure, vacuum and differential pressure negative and positive reading
- rigid housing IP 67 (1 m depth for 30 mins)
- Pressure ranges from 1 mbar to 10 bar (0.40218 to 4021.8 inH2O)
- excellent instrument accuracy
- Optional: leak testing and data logging (types 208xP)
- Overrange protection
- Autoranging displays for precise readings
- Selectable auto switch-off

The digital portable manometer **LR-*Cal* Series 2000** are suitable for pressure/vacuum/differential pressure readings with non-corrosive and non-ionised media, e.g. air, dry gases, hydraulic fluids.

This handhelds are easy to operate, reliable and build to last, in order to meet the performance and cost demands of today's markets.

The two versions of the portable digital manometer **LR-*Cal* Series 2000**:

| Types: | 202xP | 208xP |
|---|---|---|
| Protection IP 67 (with hoses connected) | ✔ | ✔ |
| Backlight display | ✔ | ✔ |
| Out of range indication | ✔ | ✔ |
| Zeroing (by pressing one key) | ✔ | ✔ |
| HOLD function (freezes value in the display) | ✔ | ✔ |
| Switchable pressure units | ✔ | ✔ |
| Range lock | ✔ | ✔ |
| Max / Min | ✔ | ✔ |
| Averaging | - | ✔ |
| Leak testing | - | ✔ |
| Data logging | - | ✔ |
| Number of keys on the keypad: | 8 | 14 |

### Technical Data:

| | |
|---|---|
| Pressure ports: | for tube 4 mm inner diam. / 6 mm outer diam.; two ports (absolute pressure types: one port) |
| Operating temperature: | 0°C ... +50°C |
| Battery type: | 2 x size AA 1.5 V (not supplied) |
| Battery life: | typical 200 hours, Low Battery Check with symbol on display |
| Display: | custom LCD 12.7 mm (0.5") |
| Auto switch-off time | 12 minutes |
| Dimensions: | 155 x 67 x 40 mm / 6.1" x 2.6" x 1.6") |
| Weight: | 180 g / 4 oz |
| Accuracy: | 0.15% rdg. +0.15% fs + 1 digit<br>0.3% rdg. +0.3% fs +1 digit (-Ve Pressures)<br>(rdg. = of reading value / fs = of full scale value) |

**DRUCK & TEMPERATUR Leitenberger GmbH**
Bahnhofstr. 33 • D-72138 Kirchentellinsfurt • Germany
Tel.: +49 - 71 21 - 9 09 20 - 0 • Fax: +49 - 71 21 - 9 09 20 - 99
E-Mail: DT-Export@leitenberger.de • http://www.druck-temperatur.de

Technische Änderungen vorbehalten. Freibleibend • (Rel. 110911) • All technical modifications reserved. Without engagement

# LR-Cal Digital Portable Manometer LR-*Cal* Series 2000
## Precise handheld instruments for Pressure

**2000**

**Pressure Ranges:**
**All instruments (except absolute pressure types) measure pressure, vacuum and differential pressure (negative and positive reading).**

| Order-Code: without | Order-Code: with Logging / Leaktest | Range: | Overrange: |
|---|---|---|---|
| 2020P | --- | 25 mbar | 350 mbar |
| 2021P | --- | 130 mbar | 750 mbar |
| 2027P | --- | 500 mbar | 1 bar |
| 2028P | --- | 1 bar | 2 bar |
| 2022P | 2082P | 2 bar | 4 bar |
| 2023P | 2083P | 7 bar | 10 bar |
| 2026P | 2086P | 10 bar | 21 bar |
| 2025P | 2085P | 2 bar absolute | 4 bar absolute |

**Pressure Scale (Units, Resolution, Scale):**

| Order-Code | 2020P | 2021P | 2027P | 2028P | 2022P 2082P | 2023P 2083P | 2026P 2086P |
|---|---|---|---|---|---|---|---|
| [mbar] | 0-1999µbar + 0.00-25.00 | 0.00-19.99 + 0.0-130.0 | 0.0-199.9 + 0-500 | 0.0-199.9 + 0-1000 | 0.0-199.9 + 0-1999 | 0.0-199.9 + 0.00-7.00bar | 0-1999 + 0.00-10.00bar |
| [Pa] | 0.0-199.9 + 0-2500 | 0.00-13.00kPa | 0.00-19.9kPa + 0.0-50.0kPa | 0.00-19.99kPa + 0.0-50.0kPa | 0.00-19.99kPa + 0.0-199.9kPa | 0.0-199.9kPa + 0-700kPa | 0.0-199.9kPa + 0-1000kPa |
| [in H2O] | 0.00-10.05 | 0.00-52.28 | 0.0-199.9 + 0-201 | 0.0-199.9 + 0-402 | 0.0-199.9 + 0-804 | 0.0-199.9 + 0-2815 | 0.0-199.9 + 0-4022 |
| [m H2O] | 0.00-19.99mm + 0.0-255.3mm | 0.0-199.9mm + 0-1320mm | 0.00-5.11 | 0.00-10.22 | 0.00-20.43 | 0.00-19.99 + 0.0-71.5 | 0.00-19.99 + 0.0-102.2 |
| [in Hg] | 0.00-0.73 | 0.00-3.83 | 0.00-14.75 | 0.00-29.5 | 0.00-59.00 | 0.00-19.99 + 0.0-206.7 | 0.00-19.99 + 0.0-295.3 |
| [m Hg] | 0.00-18.75mm | 0.00-19.99mm + 0.0-97.5mm | 0.00-19.99cm + 0.0-37.5cm | 0.00-19.99cm + 0.0-75.0cm | 0.00-19.99cm + 0.0-150.0cm | 0.00-5.25 | 0.00-7.50 |
| [psi] | 0.00-0.36 | 0.00-1.88 | 0.00-7.25 | 0.00-14.50 | 0.00-29.00 | 0.00-19.99 + 0.0-101.5 | 0.00-19.99 + 0.0-145.0 |

Types 2025Paund 2085P (2 bar absolute): units, resolution and scale as types 2022P resp. 2082P

**Optional Accessories:**

- strong carrying case type 2950, with foams — Order-code: **2950-KOFFER**
- rubber cap for 2000 series handheld — Order-code: **2000-GSK**
- IR link module with software auf CD, to read logged values — Order-code: **2000-LINK-SW**
- Magnetic kit to fix 2000 series handheld on wall etc. — Order-code: **2000-MAGKIT**
- hydrophobe filter — Order-code: **500.9.000.0001.0**
- calibration testpump types 2911/2941 or LPP 30

**www.LR-Cal.com**

**DRUCK & TEMPERATUR Leitenberger GmbH**
Bahnhofstr. 33 • D-72138 Kirchentellinsfurt • Germany
Tel.: +49 - 71 21 - 9 09 20 - 0 • Fax: +49 - 71 21 - 9 09 20 - 99
E-Mail: DT-Export@leitenberger.de • http://www.druck-temperatur.de

Technische Änderungen vorbehalten. Freibleibend • (Rel. 110911) • All technical modifications reserved. Without engagement

## Portable Manometer Type HMG 1
**for small pressure, vacuum and differential pressure**
**Ranges from 0 ... 1 mbar to 0 ... 1000 mbar**
**Option: Analogue output 0-1 V**

- Supervision of airblowers and airfilters
- Supervision of liquid levels
- Controlling of aircurrents
- Pressure controlling in clean rooms
- Medical engineerings

### Description:

The portable manometer HMG 1 measures positive or negative overpressure, differential pressure or optionally volume current. Also an absolute pressure type is available. The measured values are shown on a well visible 3.5 digit LCD (12.7 mm hight). Optional an analogue output 0-1 V is available.
Because of the use of piezoresistive sensors, the HMG 1 reaches a high reliability and precision.
The HMG 1 is battery operated (9 V, type 6F22). In case of low battery “low Bat” is shown in the display.
Each instrument is supplied with an individual inspection certificate.

### Available Types:

| Type | Output Signal |
|---|---|
| HMG 1 | no output signal |
| HMG 1-1 | output 0-1 V |

### Technical Data:

| Pressure Range [mbar] | Pressure Range [kPa] | Over-pressure [mbar] | Linear error max. [% f.s.] | Temp error (max) [±% f.s.] 0-50°C | long-term stability [% f.s.] per year | Repeatability [% f.s.] |
|---|---|---|---|---|---|---|
| 0 - 1 | 0 - 0.1 | 250 | 0.5 | 4 | 2 | 1 |
| 0 - 2.5 | 0 - 0.25 | 250 | 0.8 | 2.5 | 2 | 0.3 |
| 0 - 5 | 0 - 0.5 | 250 | 0.8 | 1.2 | 1 | 0.3 |
| 0 - 10 | 0 - 1 | 250 | 0.8 | 1 | 0.5 | 0.2 |
| 0 - 25 | 0 - 2,5 | 350 | 0.7 | 1 | 0.1 | 0.1 |
| 0 - 50 | 0 - 10 | 350 | 0.7 | 1 | 0.1 | 0.1 |
| 0 - 100 | 0 - 25 | 350 | 0.5 | 1 | 0.1 | 0.1 |
| 0 - 1000 | 0 - 50 | triple | 0.5 | 1 | 0.1 | 0.1 |
| 0 - 1999 | 0 - 100 | double | 0.5 | 1 | 0.1 | 0.1 |
| 0 - 10 bar | 0 - 1000 | 1.2-times | 0.5 | 2 | 0.1 | 0.1 |
| 700-1100 **absolute** | 70-110 **absolute** | triple | ±0.9 mbar | ±2.3 mbar | 0.1%/year | 0.1% FS |

| | |
|---|---|
| Operating temperature: | -20°C to +70°C |
| Hysteresis: | 0.1% |
| Compatible media: | Air, non-aggressive gases |
| Pressure connection: | 2 connections for hoses with 4 mm inner diameter |
| Weight: | appr. 190 g (incl. battery - battery not included in standard supply) |
| Protection: | I P 54 |
| Dimension: | 85 mm x 160 mm x 31 mm |
| Analogue output (only Type HMG 1-1): | 0-1 V, RL >= 2 Kilo-Ohm; Electr. conn. 3.5 mm handle plug 2-pole |
| Measuring rate: | 2.5 measurements per second |
| Zero adjustment: | by potentiometer |

**DRUCK & TEMPERATUR Leitenberger GmbH**
Bahnhofstr. 33 • D-72138 Kirchentellinsfurt • Germany
Tel.: +49 - 71 21 - 9 09 20 - 0 • Fax: +49 - 71 21 - 9 09 20 - 99
E-Mail: DT-Export@Leitenberger.de • http://www.druck-temperatur.de

Technische Änderungen vorbehalten. Freibleibend • (Rel. 071213) • All technical modifications reserved. Without engagement

## Hand held measuring device XA1000 - „all in one“

Universal measuring device for professionals with the inclusion of exchangeable SDI sensors (automatically recognised).

High accurate measurement of
- Barometric air pressure
- Temperature
- Relative Humidity and Air Flow

Online-/Offline data recording

Can be calibrated

Including PC-Software SmartGraph3 to archive and evaluate of the stored data

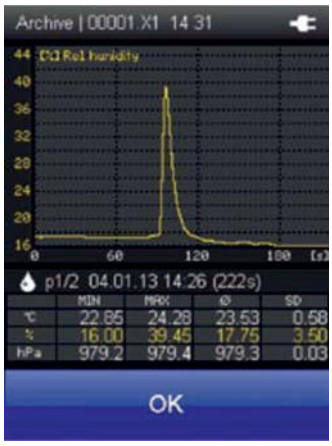

- Touchscreen operation
- USB interface incl. cable

| Technical Data | |
|---|---|
| Display: | TFT 240 x 320, 65k colours, with capacitive Touch screen |
| Display surface: | Toughened glass, scratch-resistant, 7 degree of hardness |
| Display resolution: | 2 decimal places |
| Interface: | USB (cable and PC software SmartGraph3 included) |
| Data storage: | up to 200 gauges taking approx. 1 million values |
| Power supply: | 4 Alkaline LR6 AA (included), or via USB 5V<br>Optional: mains adapter 115…230 VAC |
| Power consumption: | approx. 400 mW (active) |
| Battery life: | approx. 1 year passive; min. 24 hours active |
| Integr. sensor supply: | 5.5 V ±10% DC, max. 200 mA |
| **Integrated Air Pressure sensor:** (barometric pressure) | Range 800…1100 mbar<br>Accuracy 0.5 mbar (at 25°C/1013.25 mbar)<br>Resolution 0.024 mbar<br>Measuring principle: piezoresistive |
| Opteration conditions: | <90% r.h. (20 g/m³) non-condensing<br>max. 4000 m altitude above sea level |
| Storage conditions: | -20…+60°C ambient temperature<br><90% r.h. non-condensing |
| Dimension: | 170 x 62 x 34 mm |
| Weight: | approx. 205 g |

| Calculated measurement categories for external temperature/humidity sensors |
|---|
| Mathematical: MIN, MAX, AVG, HOLD |
| Temperature (°C/°F) |
| Relative humidity (% r.h) |
| Relative humidity of ice (% r.h) |
| Water vabour density (absolute humidity) g/m³ |
| Dew point temperature °C/°F |
| Frost point temperature °C/°F |
| Mixing ratio at saturation (100%) g/kg |
| Volume fraction of water vapour/mass fraction of water vapour (%) |
| Wet-bulb temperature °C/°F |
| Ice-bulb temperature °C/°F |
| Specific Enthalpy (mass of air) kJ/kg |
| Saturation vapour pressure above ice/water (hPa) |
| Vapour particle pressure (hPa) |
| Air density kg/m³ |

| Calculated measurement categories for external airflow sensors |
|---|
| Operational airflow volume: Various units: m³/s, m³/h, l/min |
| Standard airflow volumes:<br>DIN 1343: °C; 1013.25 hPa<br>ISO 2533: 15°C; 1013.25 hPa<br>DIN 1945: 20°C; 1013.25 hPa |

# XA1000

## Hand-held Measuring Device for barometric pressure, temperature, humidity and airflow

| Temperature-Humidity Sensors | Digital temperature/humidity sensor TFF20<br>Reference device in service and maintenance,<br>suitable for air conditioning and heading segments. | Allround SDI temperature/humidity sensor<br>compact, stainless steel tube<br>HVAC field, reference for ISO 9000. | SDI temperature/humidity sensor 4 mm diameter<br>compact slim with stainless steel protective tube<br>also measurements in difficult to access areas. | SDI high temperature/humidity sensor<br>Stainless steel sensor with Teflon probe,<br>suitable for high temperature. |
|---|---|---|---|---|
| **Order-Code:** | **8120.TFF** | **9130.540** | **9130.520** | **9130.530** |
| Dimensions | Length 85 mm x diameter 12 mm | Sensor length 74 mm x diameter 12 mm<br>Housing 117 x 38 mm | Sensor tube length 250 mm x diameter 4 mm<br>Housing 117 x 38 mm | Sensor tube length 250 mm x diameter 12 mm<br>Housing 117 x 38 mm |
| Weight | approx. 50 g | approx. 80 g | approx. 85 g | approx. 200 g |
| Protection | Polycarbonate / IP 65 | Housing/Sensor IP 40<br>Sensor head plastic mesh | Housing IP 40 / sensor IP 40 sensor head:<br>screwable, stainless steel cap, PTFE filter | Housing IP 40 / sensor IP 40 sensor head<br>stainless steel sinter filter |
| Perm. operation temp. | 0...50°C | 0...50°C | 0...50°C | 0...50°C |
| Permitted humidity | 0...95% r.h. | 0...95% r.h. | 0...95% r.h. | 0...95% r.h. |
| Storage temperature | -20...+60°C+60°C | -20...+60°C | -20...+60°C | -20...+60°C |
| Storage humidity | 20...80% r.h. | 20...80% r.h. | 20...80% r.h. | 20...80% r.h. |
| **Relative Humidity:** | | | | |
| Measurement range | 0.00...100.00% r.h. | 0...100% r.h. | 0.00...100.00% r.h. | 0.00...100.00% r.h. |
| Accuracy | ±2% (0...90%); ±3% (90...100%) r.h. | ±2% (0...90%); ±3% (90...100%) r.h. | ±2% (0...90%); ±3% (90...100%) r.h. | ±2% (0...90%); ±3% (90...100%) r.h. |
| Resolution | 0.01% r.h. | 0.1% r.h. | 0.1% r.h. | 0.1% r.h. |
| Principle | capacitive | capacitive | capacitive | capacitive |
| **Temperature:** | | | | |
| Measurement range | -40...+80°C | -20...+70°C | -40...+100°C | -40...+180°C |
| Accuracy (20°C) | ±0.1°C | ±0.2°C | ±0.2°C | ±0.2°C |
| Accuracy | ±0.2°C (0...40°C), otherwise ±0.5°C | ±0.4°C (-10...+50°C), otherwise ±0.5°C | ±0.7°C | ±0.7°C |
| Resolution | better 0.01°C | 0.1°C | 0.1°C | 0.1°C |
| Principle | Pt1000, Class A, DIN EN 60751 | NTC | Pt1000, Class B, DIN EN 60751 | Pt1000, Class B, DIN EN 60751) |
| **Absolute Humidity:** | | | | |
| Measurement range | 0...300 g/m³ | | | |
| Unit | g/m³ | | | |
| **Dew Point Temperature:** | | | | |
| Measurement range | -40...+80°C | | | |
| **Mixing Ratio Compatibility:** | | | | |
| Measurement range | 0...550 g/kg | | | |

| Airflow-Temperature Sensors | SDI Airflow-/Temperature Sensor 0...2 m/s<br>Reference device in service and maintenance,<br>Proof air tightness of buildings and rooms. | SDI Airflow-/Temperature Sensor 0...20 m/s<br>Airflow and temperature measurement in<br>climate measurement technology. |
|---|---|---|
| **Order-Code:** | **6120.510** | **6120.520** |
| Dimensions | Sensor tube length 200 mm x diameter 6 mm<br>Housing 117 x 38 mm | Sensor tube length 200 mm x diameter 6 mm<br>Housing 117 x 38 mm |
| Weight | approx. 200 g | approx. 200 g |
| Protection | Housing: plastic (ABS) IP40<br>sensor head: stainless steel | Housing: plastic (ABS) IP40<br>sensor head: stainless steel |
| Perm. operation temp. | 0...50°C | 0...50°C |
| Permitted humidity | 0...95% r.h. | 0...95% r.h. |
| Storage temperature | -20...+60°C | -20...+60°C |
| Storage humidity | 20...80% r.h. | 20...80% r.h. |
| **Airflow:** | | |
| Measurement range | 0...2 m/s | 0...20 m/s |
| Accuracy | 20°C, 45% r.h.; 1013 hPa: ±(0.04 m/s +1% of measured value) | |
| Resolution | 0.01 m/s | |
| Principle | Hot film aneometer | |
| **Temperature:** | | |
| Measurement range | -20...+70°C | |
| Accuracy | ±0.7°C in the range 0...50°C and v > 0.5 m/s | |
| Resolution | 0.1°C | |
| Principle | NTC | |

8120.TFF

9130.540

9130.520

9130.530

6120.510 & 6120.520